PML 2.

The universal laboratory bead mill.

Innovations for a **better world.**

BÜHLER

The PML 2 is the optimal solution for the development of innovative wet grinding processes. The core piece is a robust and powerful drive and control unit which can be combined with different process units tailored to specific applications.

Laboratory bead mill PML 2.
Platform for individual process development.

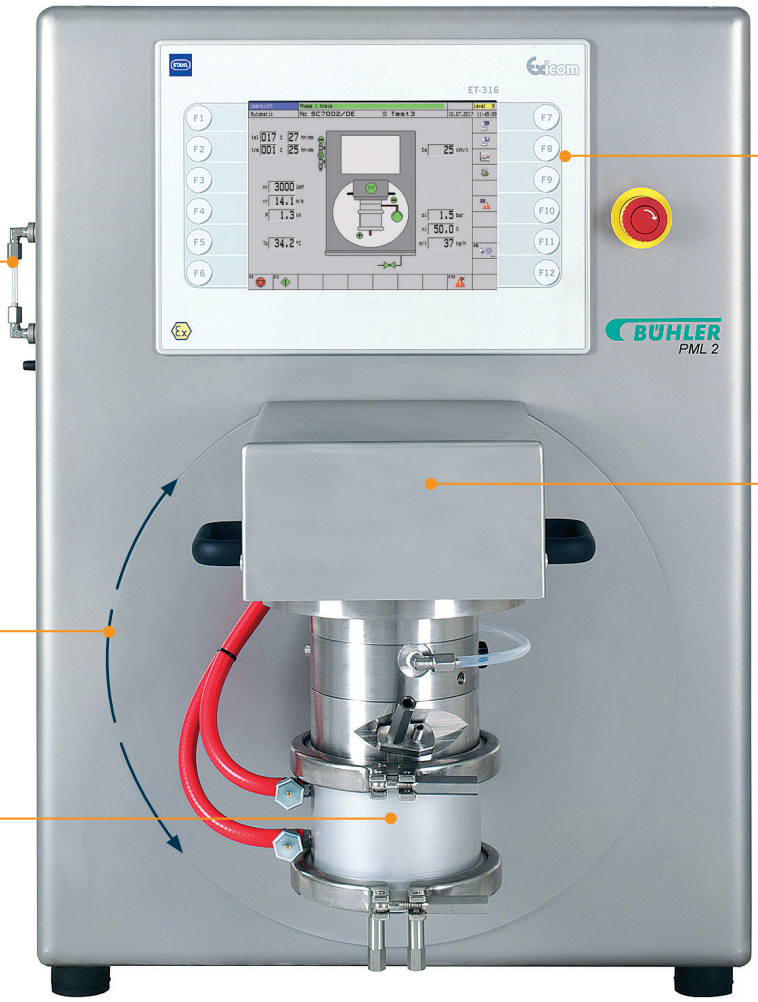

Sealing medium level indicator for the double acting mechanical seal

PREMIUM control with graphic display touch screen or COMFORT execu-tion with push-button operation

Efficient drive unit suitable for all process units

Rotatable drive and process unit

Exchangeable process units for a range of applications

Selection of applications.

High value coatings
– Automotive OEM & Refinish
– Anti-corrosion coatings
– Industrial coatings

Printing inks
– Inkjet inks
– Liquid printing inks
– Liquid toners

Displays & electronics
– Colour filters
– Metal pastes
– Ceramic pastes
– Glass pastes

Specialty chemicals
– Agro chemicals
– Pigment concentrates
– TiO_2-dispersions
– Adhesives and sealants

Process units for various applications. **With ceramic, synthetic and steel executions.**

Process unit in vertical position – SuperFlow 4 and MicroMedia L; and service position for draining of the grinding beads

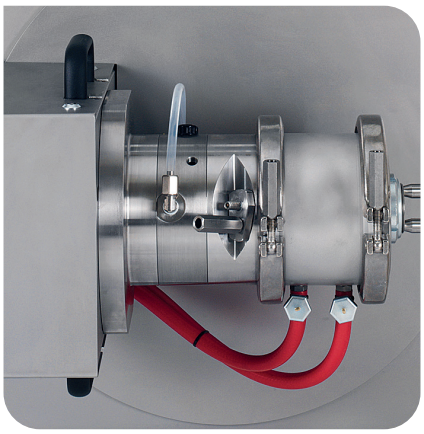

Process unit in horizontal position – Centex S1/S2

Service position for mounting of the process unit, filling of the grinding beads and cleaning

The universal bead mill platform for lab-scaled process development has a modular design and offers unmatched flexibility.

The pivoting drive unit is the core part on which established Bühler process units, in several ceramic, synthetics and steel executions, can be operated:

- Centex S1 and S2 – horizontal disc agitator with axially arranged protective screen
- SuperFlow 4 – high performance agitator operating in recirculation mode
- MicroMedia L – agitator for micro beads ranging from 20 to 300 µm

Dependent on the process unit, either a vertical or horizontal operating position is selected. Selecting the service position allows for cleaning and maintenance of the process unit as well as filling of grinding beads and ensures easy handling and reduced set-up times.

The effective grinding volume depends on the chosen process unit and varies between 0.07 and 0.6 litres. The PML 2 is suitable for basic testing of low to medium viscous products.

Custom-designed components

- An optional stainless steel machine frame is available for high-tech applications in the clean room and meets the most stringent cleaning, hygiene and acid resistance requirements.
- Wear resistant ceramic components to ensure contamination-free processing, e.g. when producing substances for the electronics industry.
- Proven material combinations for optimized processing of abrasive and corrosive products, e.g. agro chemicals, pigments and engineered ceramics.

Tailored wet-grinding technology.
Flexible solution for research and development.

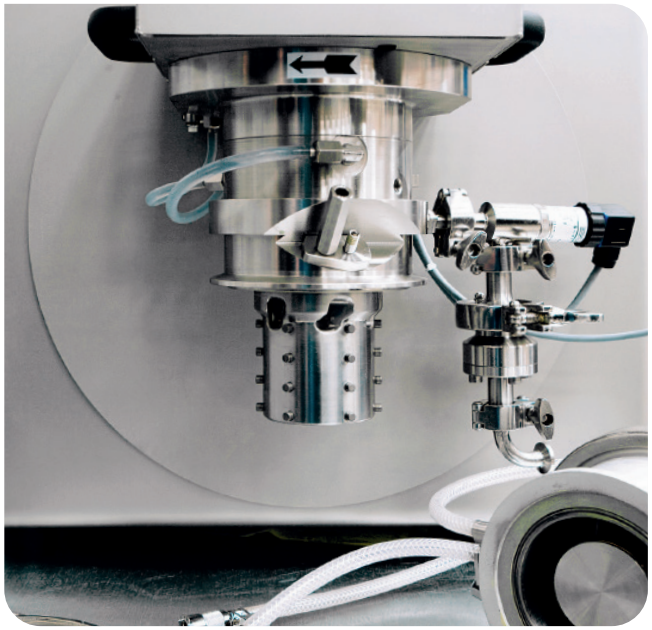

Easily exchangeable process units: SuperFlow 4

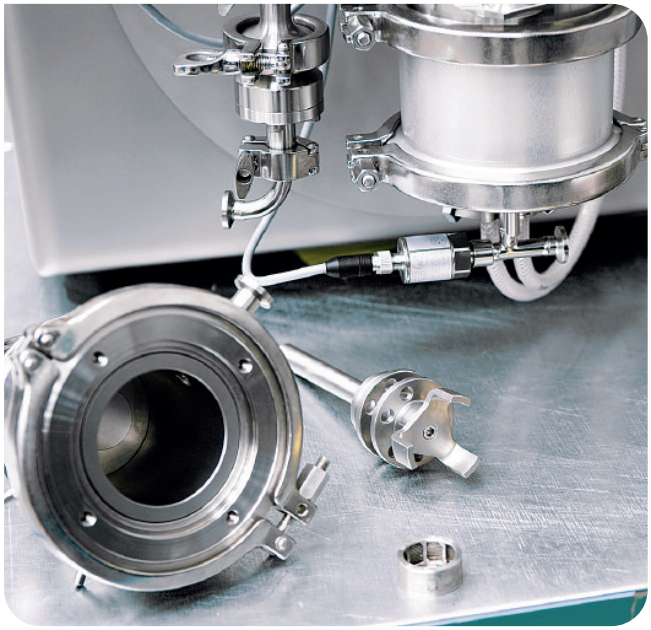

Process units: Centex S1

Exchangeable process units allow a flexible use for various applications.

SuperFlow
- Pin/counter pin agitator with high power density in DraisResist
- Particle size reduction down to submicron range
- Recirculation operation
- Large-scale production units available up to 110 kW

MicroMedia
- Optimized for operation with micro beads ranging from 20 to 300 µm
- “Soft milling” and “High energy grinding” down to nanometre range
- Recirculation operation
- Materials: DraisResist and various ceramics
- Large-scale production units available up to 110 kW

Cenomic and Centex
- Full volume bead mill
- Materials: DraisResist, PU, various ceramics
- Bead separation by axially arranged protection sieve
- Recirculation or single passage operation
- Continuous or discontinuous operation possible
- Large-scale production units available up to 355 kW

User friendly solutions for maximum efficiency. **Bühler control systems.**

Every business and every product is different. Bühler automation systems make sure that you benefit from a solution that is perfectly tailored to your needs.

PREMIUM

Display of all inputs and operating parameters (also trend depiction) on graphic display touch-screen. The PREMIUM package allows additional selection of specific control algorithms and offers various interfaces to main control systems or the Bühler data logging system “WinTrend”.

COMFORT

Simple relay control with the following elements:
– Start/Stop agitator
– Potentiometer: rpm for agitator
– Start/Stop feed pump
– Potentiometer: capacity for feed pump
– Ampere meter for motor power
– Alarm signal and emergency-stop

Technical data PML 2.
The universal laboratory bead mill.

Specification	
Operating position horizontal or vertical	●
Service position vertical	●
Modular design	●
Easy to change process zones	●
Doubly acting mechanical seal	●
Gearpump, peristaltic pump	○
Control package PREMIUM	○
Explosion-proof	○
Monitoring of product pressure	●
Monitoring of product temperature	●
Interface for process data recording with WinTrend	○
Machine frame made of stainless steel	○

Technical data, weight, etc	
Power	2.2 kW
RPM of Motor	3000 min^{-1}
RPM of Rotor	500 – 4000 min^{-1}
Active volume of process zone	0.07 – 0.6 l
Weight	150 kg

PML 2

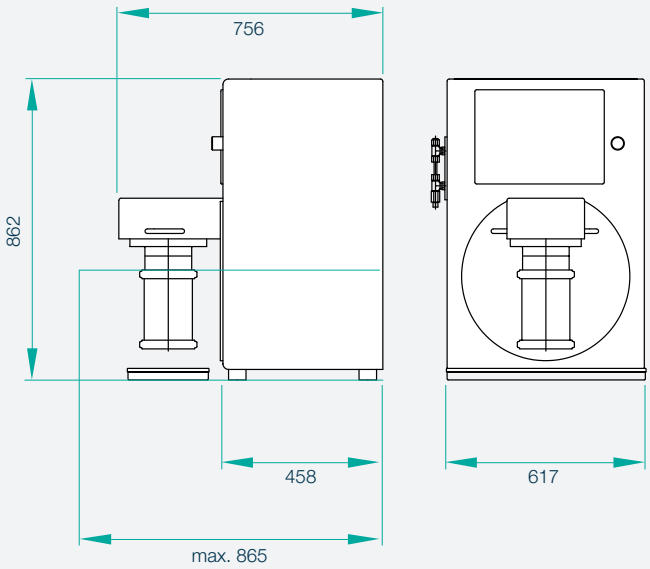

Process unit		SuperFlow 4	MicroMedia L	Centex S1	Centex S2
Agitator	**Stator**				
DraisResist (metal)	DraisResist™ (metal)	●	●	●	●
Ceramic SSiC	Ceramic SSiC		●	●	●
Ceramic $ZrO_2(Y_2O_3)$	Ceramic $ZrO_2(Y_2O_3)$		●		
Ceramic $ZrO_2(Y_2O_3)$	Ceramic Al_2O_3				●
DraisElast (metal-free)	DraisElast™ (metal-free)				●
DraisElast (metal-free)	DraisResist™ (metal)				●
Discontinuous operation				○	
No. of discs				2	4
Active volume of process zone [l]		0.275	0.070	0.222	0.600
Grinding media [mm]		0.2–0.8	0.05–0.3	0.2–2.0	0.2–2.0
Position (vertical / horizontal)		V	V	H	H

● = Standard. ○ = Option.
All data are approximate. Technical alterations reserved.

201022_PML 2_EN_A4

Bühler AG

CH-9240 Uzwil
Switzerland

T +41 71 955 11 11
F +41 71 955 31 49

grinding.dispersing@buhlergroup.com
buhlergroup.com